Technical Publications
Litho U.S.A.
©2014

506207-01
12/2014
Supersedes 9/2009

INSTALLATION INSTRUCTIONS FOR COLD WEATHER KIT USED ON LGH036-072 GAS PACKAGED UNITS

⚠WARNING

Improper installation, adjustment, alteration, service or maintenance can cause property damage, personal injury or loss of life. Installation and service must be performed by a qualified installer, service agency or the gas supplier

⚠WARNING

Electric Shock Hazard. Can cause injury or death. Unit must be grounded in accordance with national and local codes.

Line voltage is present at all components when unit is not in operation on units with single-pole contactors. Disconnect all remote electric power supplies before opening access panel. Unit may have multiple power supplies.

Shipping and Packing List

Package 1 of 1 contains:

1- Heater assembly

1- Control assembly

1- Wire harness

4- #10 Sheet metal screws

Application

The cold weather kit heats the compressor compartment to allow gas valve operation during low outdoor temperatures.

See table 1 for usage.

TABLE 1

Unit Voltage	Kit
P, Y	604263-01; 54W23
G, M	604263-02; 54W24
J	604263-03; 54W25

Installation

⚠CAUTION

Danger of sharp metallic edges. Can cause injury. Take care when servicing unit to avoid accidental contact with sharp edges.

1- Disconnect all power to unit and open compressor access panel.

2- Install the heater and control assembly in the compressor compartment as shown in figure 1 and 3. Secure with provided screws.

3- Make harness and wire connections as shown in figure 2. Refer to figure 3 for component layout details.

4- Route wires away from copper plumbing. Do not leave any wires on base pan.

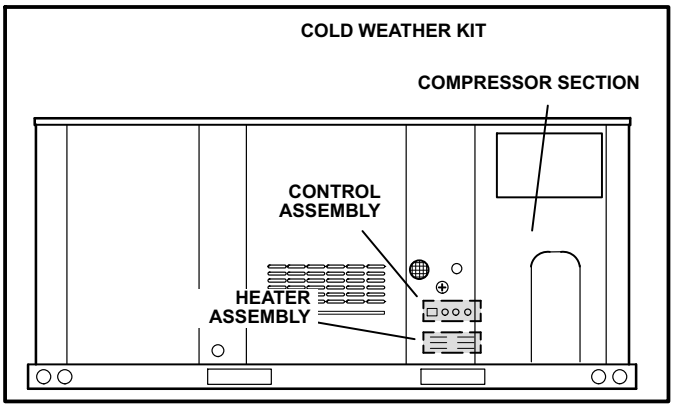

FIGURE 1

Operation

When ambient temperature drops below 20°F (-7°C), S61 closes. When ambient temperature drops below -10°F (-23°C), S60 closes to energize K125 and bring on HR6 heater.

When ambient temperature rises to 20°F (-7°C), S60 opens to de-energize HR6 heater.

When ambient temperature drops below -20°F (-29°C), S59 opens to disable GV1 gas valve. S59 closes to allow heating when temperature rises to 10°F (-12°C).

1214
506207-01

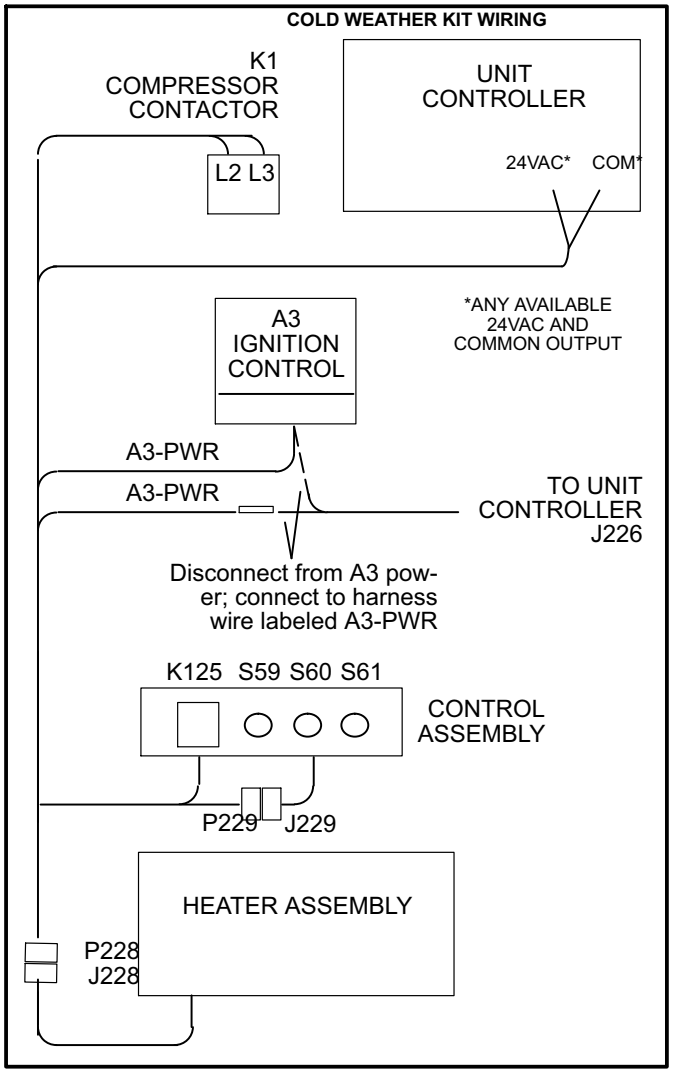

FIGURE 2

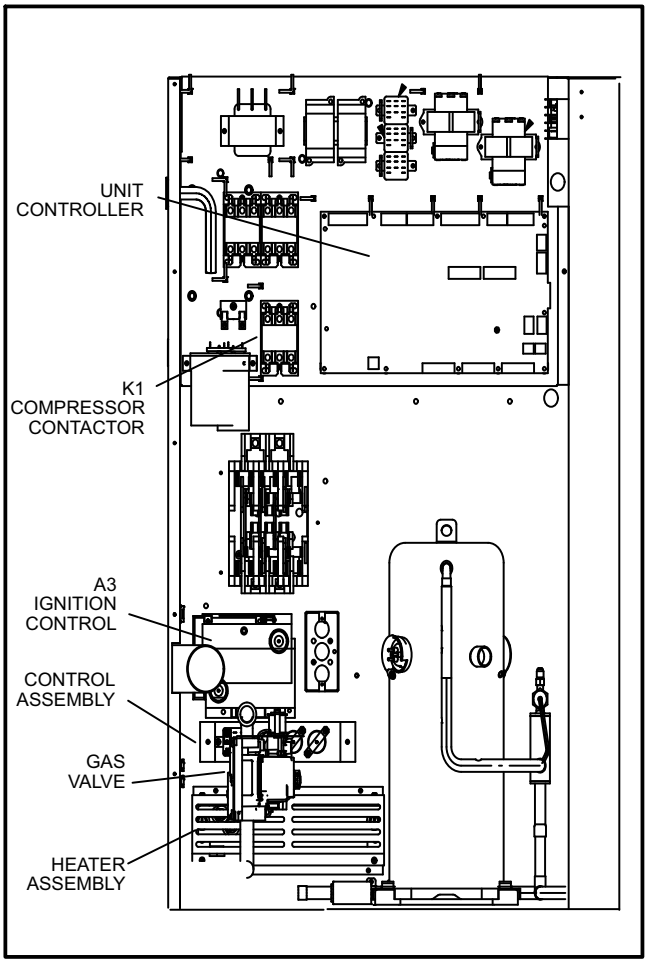

FIGURE 3